Descent of Meredith Branches from Rhodri Mawr
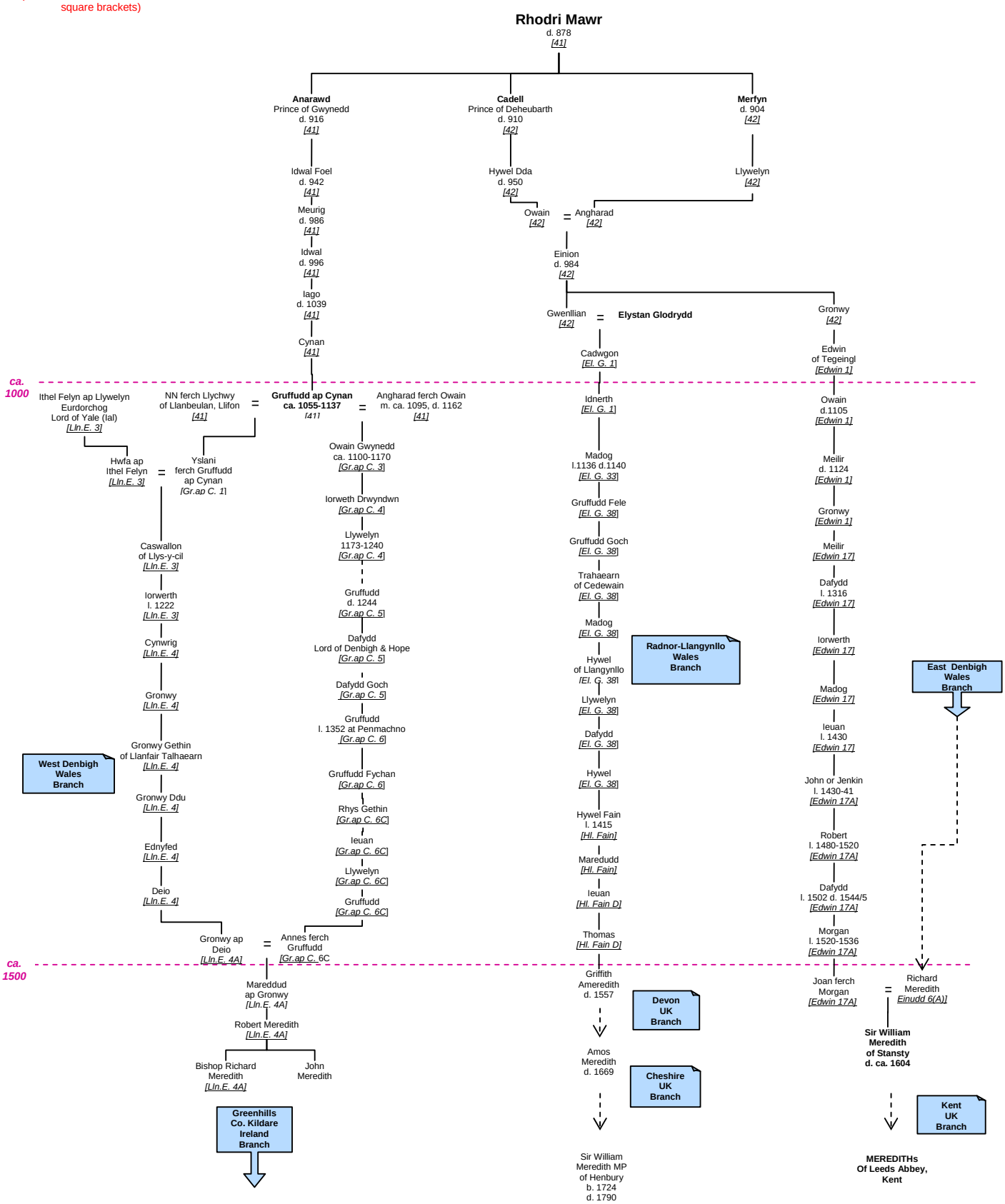
Transcribed by Keith Winters
(Bartrum references underlined in square brackets)